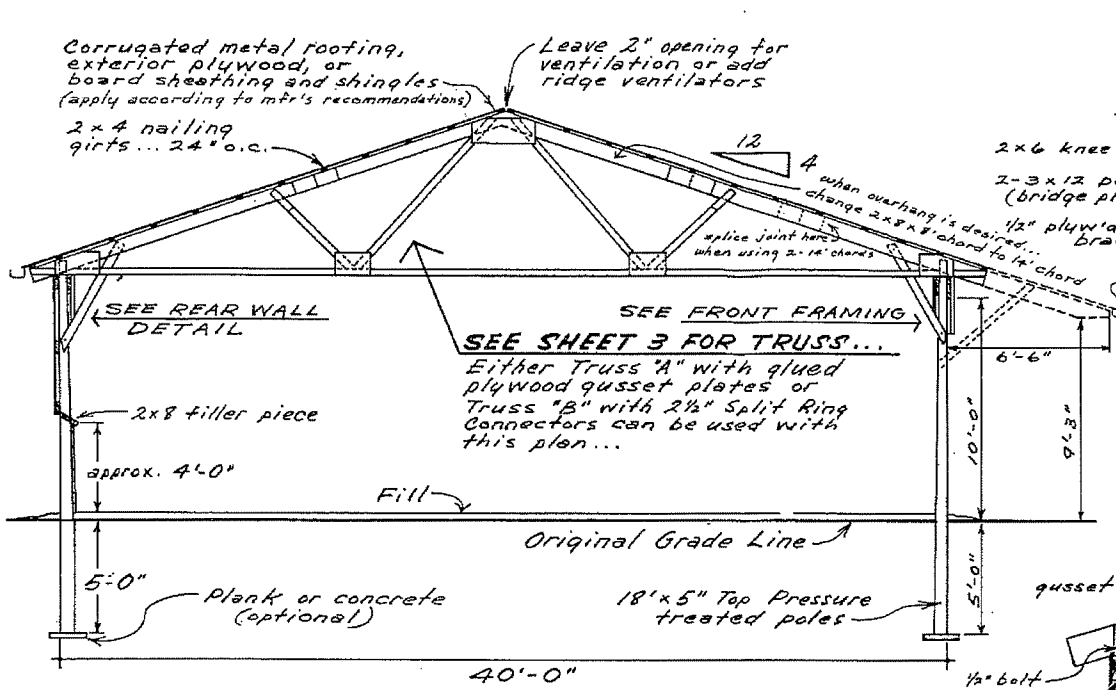

CROSS SECTION

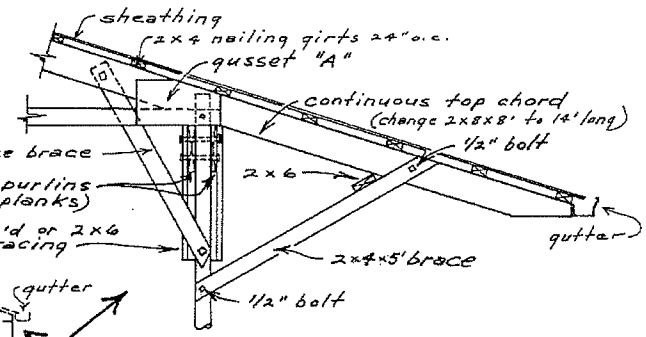

OVERHANG FRAMING DETAIL (optional)

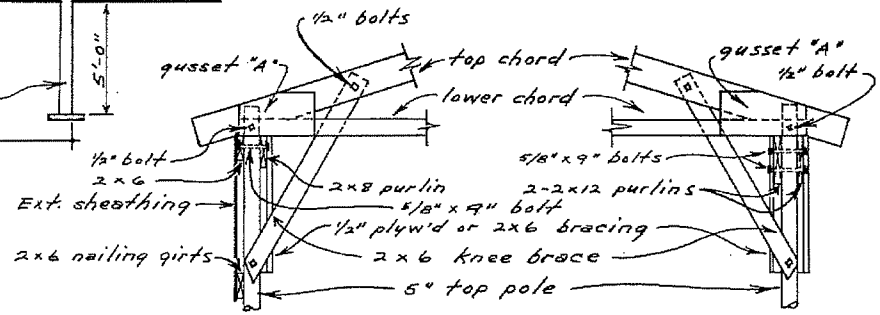

REAR WALL FRAMING

FRONT FRAMING

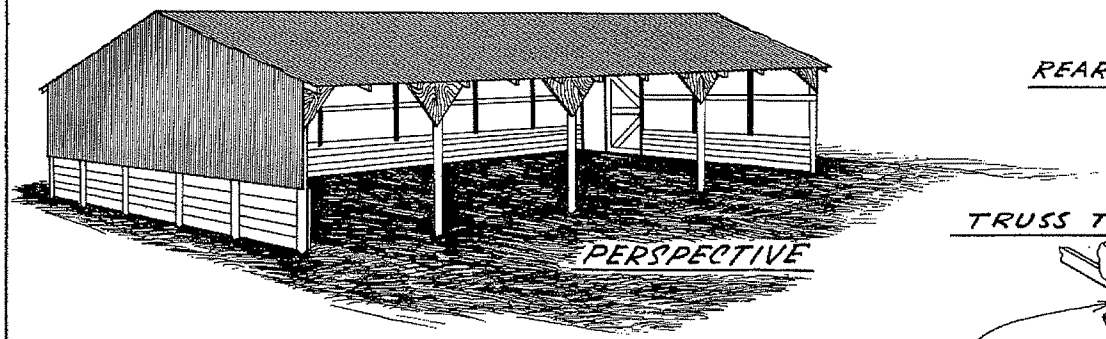

PERSPECTIVE

TRUSS TIE DETAIL

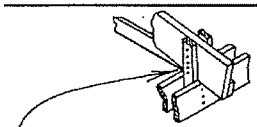

tie trusses to purlins with 2-2x6's

COOPERATIVE EXTENSION WORK IN AGRICULTURE AND HOME ECONOMICS
STATE OF NORTH DAKOTA
NORTH DAKOTA STATE UNIVERSITY OF AGRICULTURE AND APPLIED SCIENCE AND UNITED STATES DEPARTMENT OF AGRICULTURE COOPERATING

40' CLEAR SPAN POLE TYPE LIVESTOCK BARN

N.D. 724-1-5 | sheet 1 of 3

DATE: 8/1/64 revis.

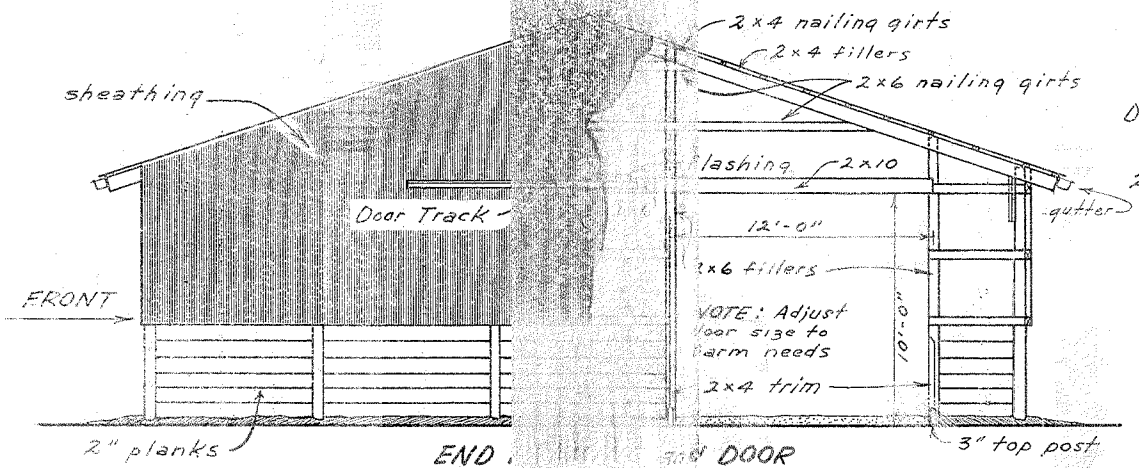

END DOOR

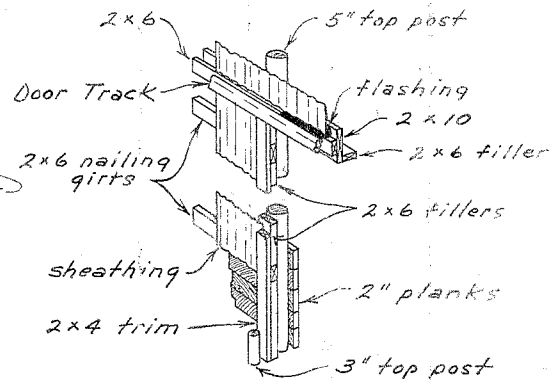

DOOR FRAMING DETAIL

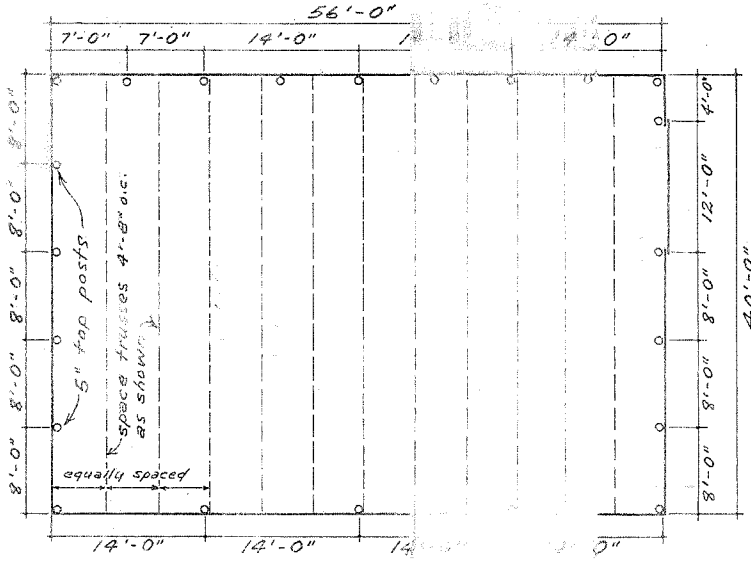

FLOOR PLAN

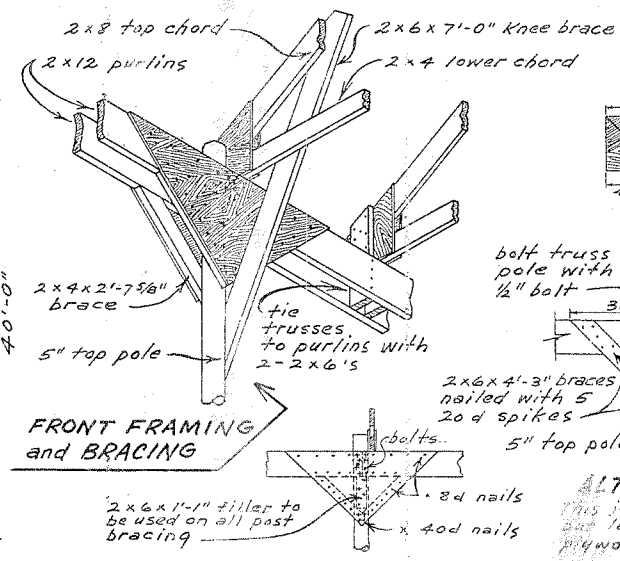

FRONT FRAMING and BRACING

BRACING and NAILING DETAIL
(use single bracing on rear wall)

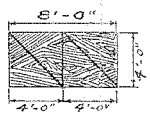

Exterior 1/2" C-C plywood CUTTING PATTERN

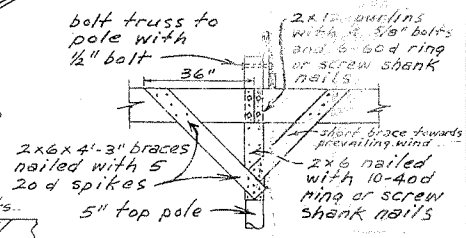

ALTERNATE FRAMING

This joint is more conventional and less effective than the plywood detail shown

USE PRESSURE TREATED POLES AND FRAMING MATERIALS FOR ALL SECTIONS IN CONTACT WITH THE GROUND.

COOPERATIVE EXTENSION WORK IN
AGRICULTURE AND HOME ECONOMICS
STATE OF NORTH DAKOTA
NORTH DAKOTA STATE UNIVERSITY
OF AGRICULTURE AND APPLIED SCIENCE AND
UNITED STATES DEPARTMENT OF AGRICULTURE COOPERATING

40' CLEAR SPAN POLE TYPE LIVESTOCK BARN

N.D. 724-1-5

DATE: 8-1-64 revs.

sheet 2 of 3

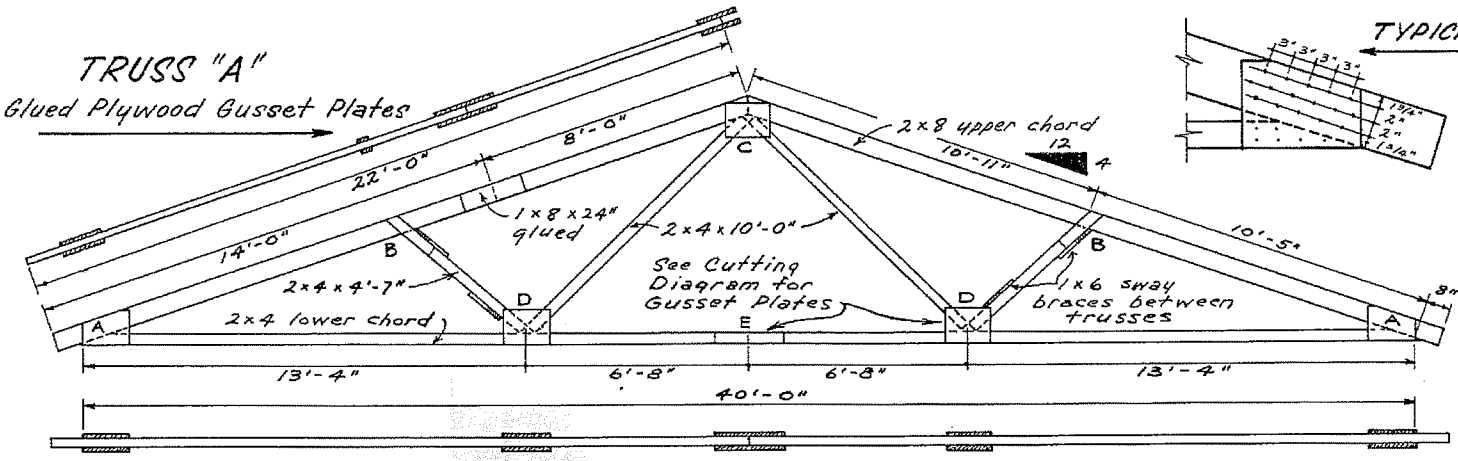

EXTERIOR C-C
1/2" PLYWOOD
CUTTING PATTERN

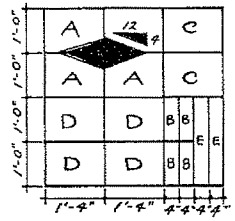

NOTE: USE 2-2×8×14' TOP CHORDS WHEN OVERHANG IS DESIRED. SEE OVERHANG DETAIL ON SHEET 1...

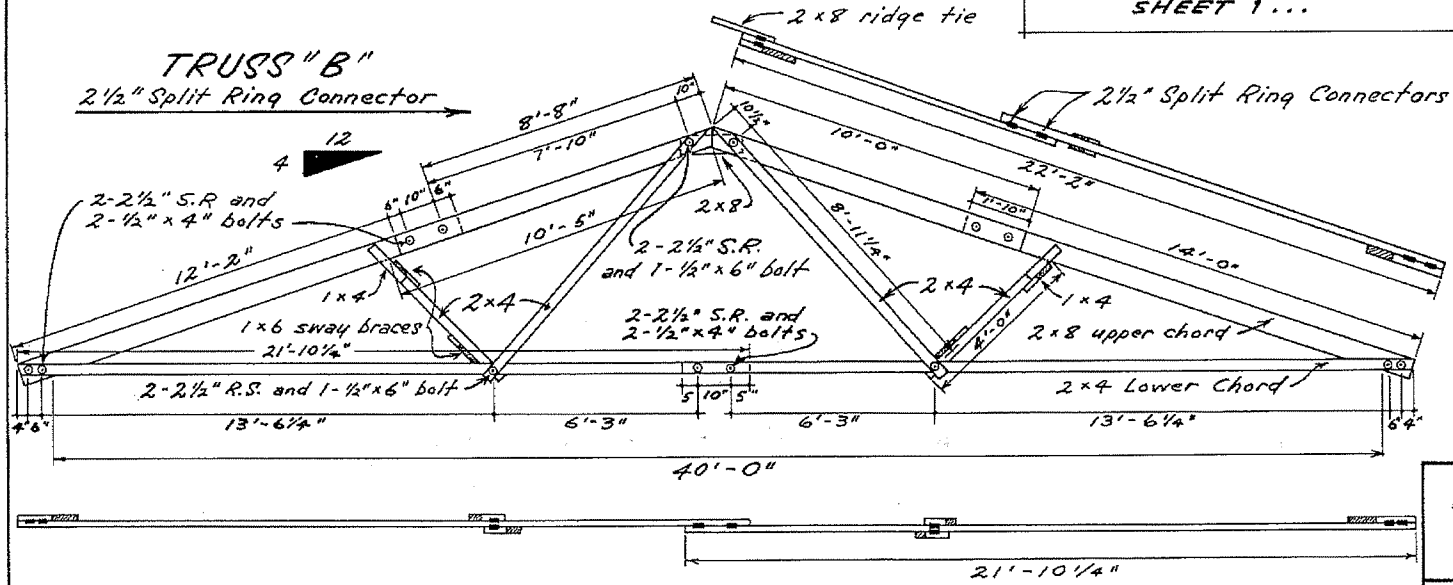

COOPERATIVE EXTENSION WORK IN AGRICULTURE AND HOME ECONOMICS
STATE OF NORTH DAKOTA
NORTH DAKOTA STATE UNIVERSITY OF AGRICULTURE AND APPLIED SCIENCE AND UNITED STATES DEPARTMENT OF AGRICULTURE COOPERATING

40' CLEAR SPAN POLE TYPE LIVESTOCK BARN

N.D. 724-1-5

DATE: 8-1-64 revs.

sheet 3 of 3