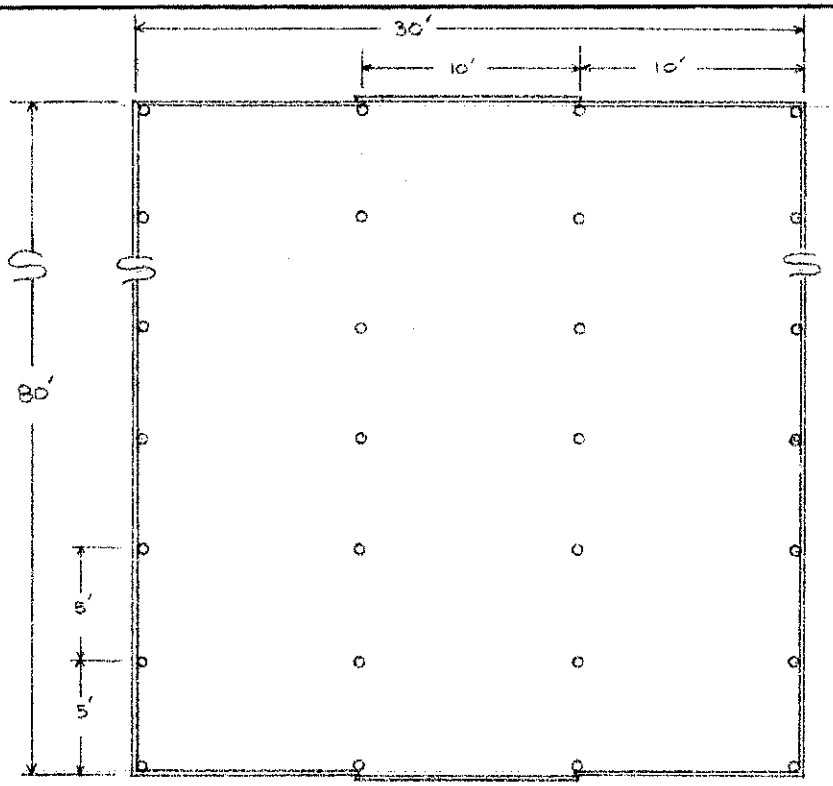

FLOOR PLAN

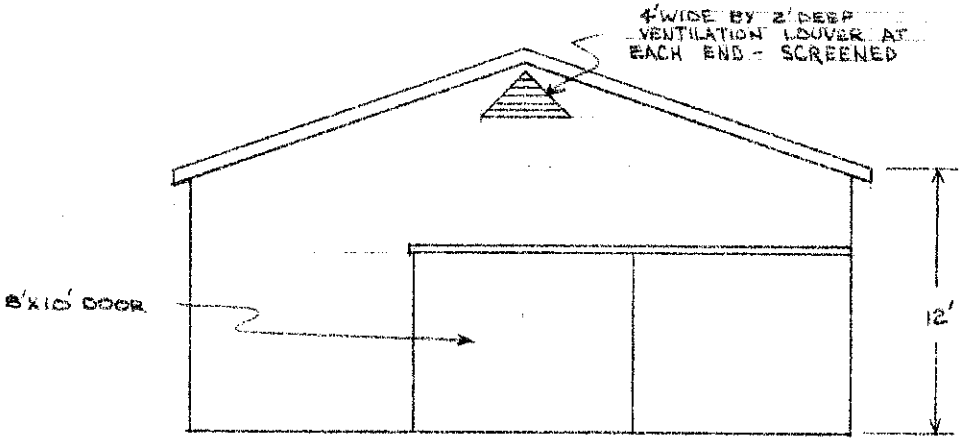

END VIEW

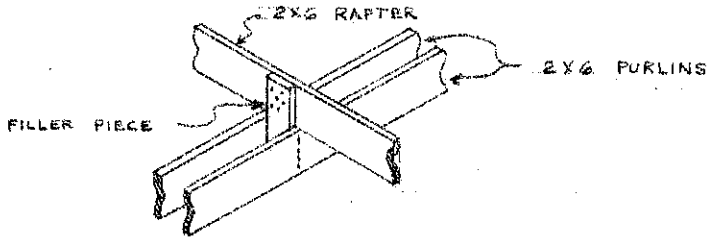

RAFTER TIE

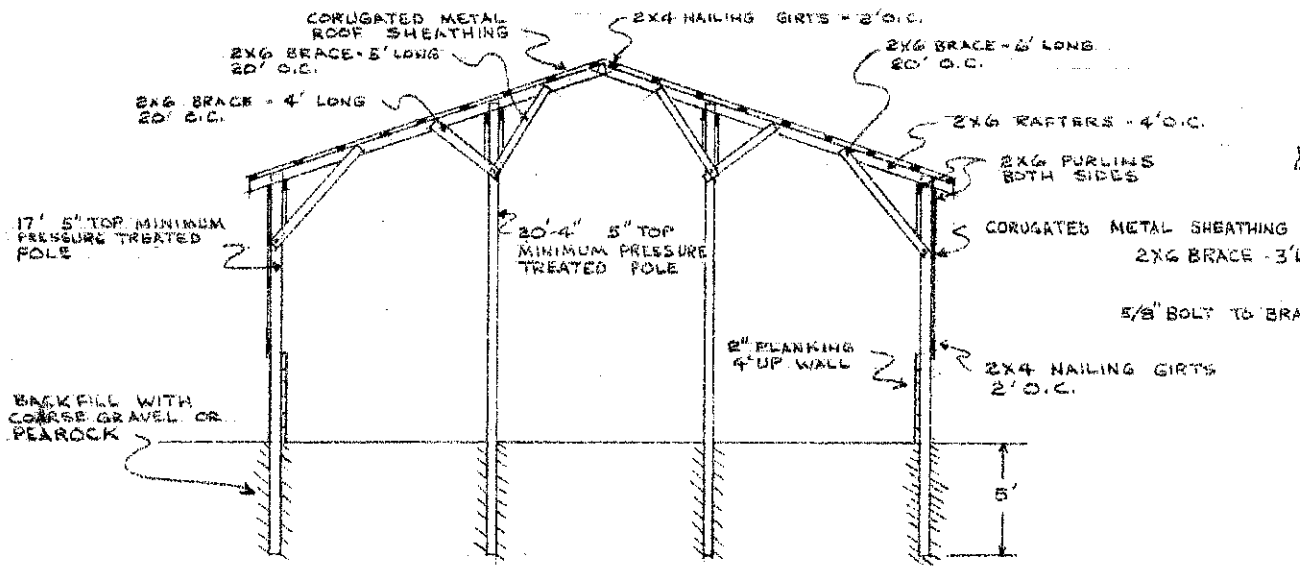

CROSS SECTION

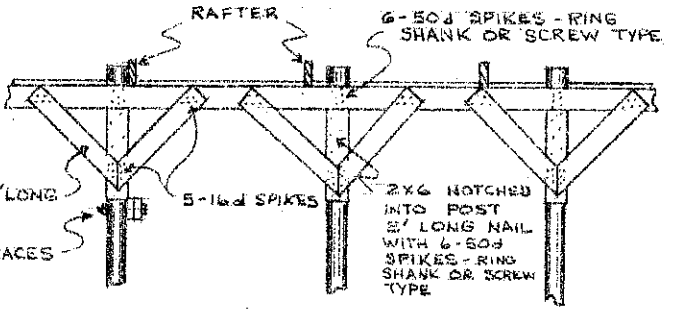

BRACES AT PURLIN

30' POLE BARN - GABLE ROOF		
SUITABLE FOR TIE STALL HORSE BARN	SCALE 1" = 4'	DRAWN BY B.R. LINDSTROM REVISED
EXTENSION AGRICULTURAL ENGINEERING DEPT. NORTH DAKOTA STATE UNIVERSITY		
DATE 7-5-73	APPROVED BY N.D. 724-1-11	DRAWING NUMBER