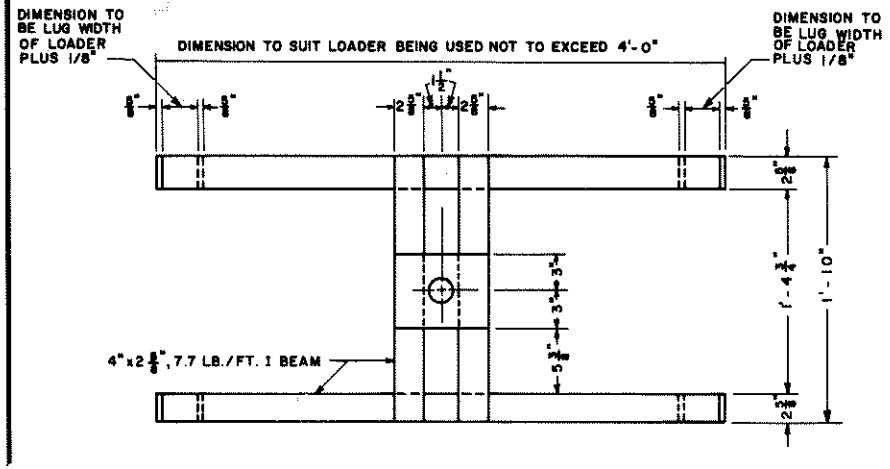

PLAN

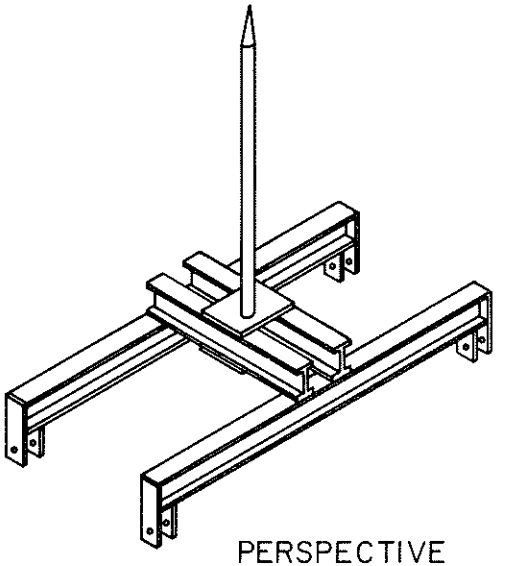

PERSPECTIVE

NOT TO SCALE

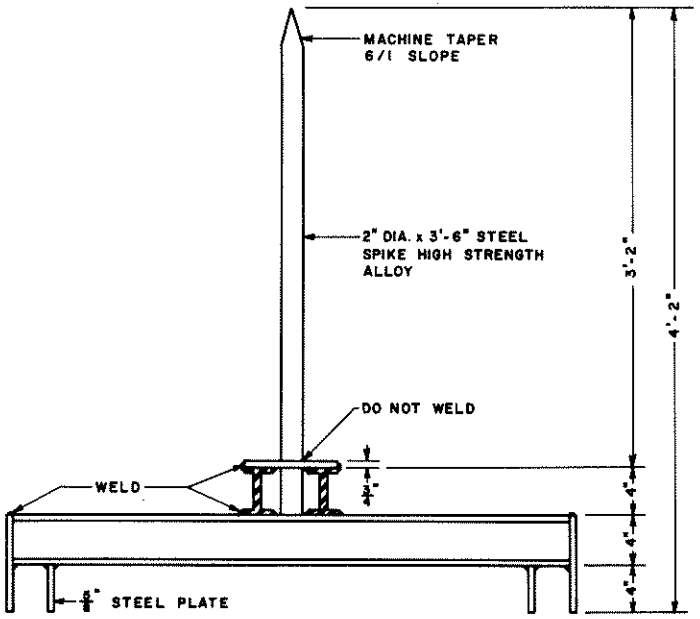

SIDE ELEVATION

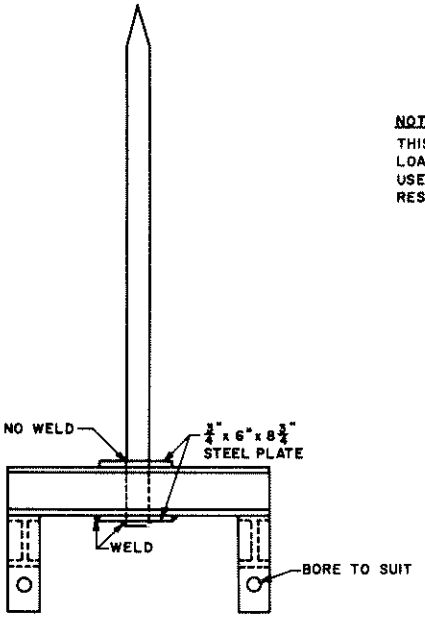

END ELEVATION

NOTE:
THIS HAY SPIKE SUITABLE FOR FRONT END LOADERS WITH TWO (2) ACTUATORS ONLY. USE WITH SINGLE ACTUATOR LOADER MAY RESULT IN DAMAGE TO LOADER.

NOTE: BASE ON UNIV. OF FLA PLAN NO. 926

COOPERATIVE EXTENSION WORK IN AGRICULTURE AND HOME ECONOMICS

AND UNITED STATES DEPARTMENT OF AGRICULTURE COOPERATING

HAY SPIKE

EX. 6329 | SHEET 1 OF 1